CLOW
CLOW CANADA

360C

4" - 12"

RESTRAINER

EPOXY COATED FOR PVC PIPE
WITH DUCTILE IRON O.D.
FM APPROVED 4" - 12"
CERTIFIED TO UNIBELL B-13-92 AND ASTM F-1674-11
SUITABLE FOR C-900 & C-907 PVC FITTINGS

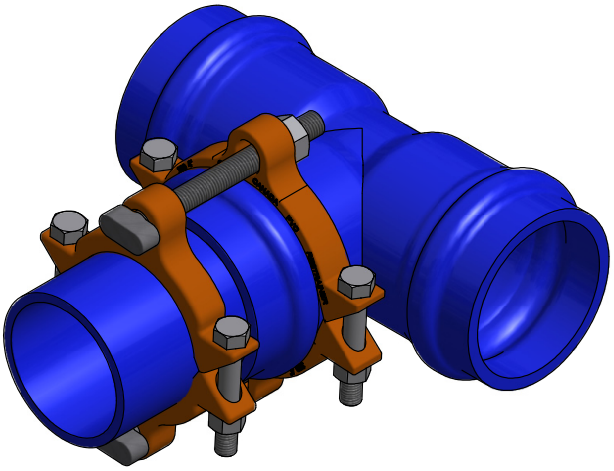

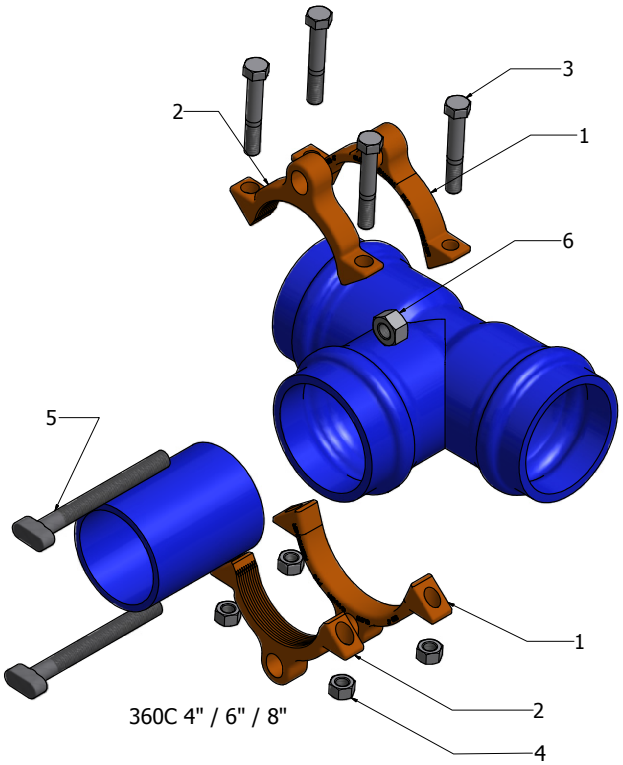

360C 4" / 6" / 8"

REF#	DESCRIPTION
1	360C RESTRAINER HALF D.I. A-536 Gr. 65-45-12
2	300C RESTRAINER HALF D.I. A-536 Gr. 65-45-12
3	HEX HEAD BOLT, ZINC PLATED or ST. STL.
4	HEX NUT, ZINC PLATED or ST. STL.
5	3/4" T-HEAD BOLT or ROD Z.P. or ST. STL.
6	3/4" HEAVY HEX NUT ZINC PLATED or ST. STL.

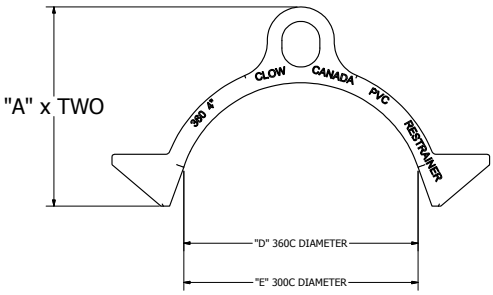

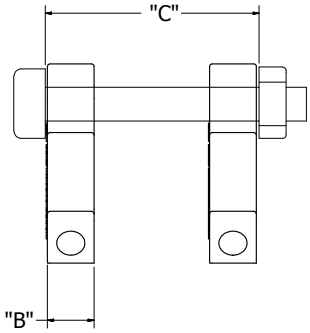

NOM. PIPE SIZE	"A" (2)	"B"	"C"	"D"	"E"	SHIPPING WT.	CLAMPING BOLTS - ZINC PLATED or 304 SS	CLAMPING BOLT TORQUE	RESTRAINING RODS - ALLOY STEEL or 304 SS
4"	9 5/8"	1 1/8"	6"	5.96	4.7	14 lbs	4 @ 5/8" x 3 1/2"	100 FT LBS	2 @ 3/4"x7" T-bolt
6"	12 1/8"	1 1/4"	6"	8.06	6.83	19 lbs	4 @ 5/8" x 4"	100 FT LBS	2 @ 3/4"x7" T-bolt
8"	14 7/8"	1 1/4"	6" (8")	10.56	8.98	30 lbs	4 @ 3/4" x 5"	150 FT LBS	2 @ 3/4"x12" Thrd Rod
10"	17 3/8"	1 3/8"	6" (8")	12.66	11.03	44 lbs	4 @ 7/8" x 6"	200 FT LBS	4 @ 3/4"x12" Thrd Rod
12"	20 3/4"	1 3/8"	6" (8")	15.19	13.13	54 lbs	4 @ 7/8" x 6"	200 FT LBS	4 @ 3/4"x12" Thrd Rod

NOT SUITABLE FOR USE WITH DR25 FITTINGS

MADE IN CANADA

www.clowcanada.com